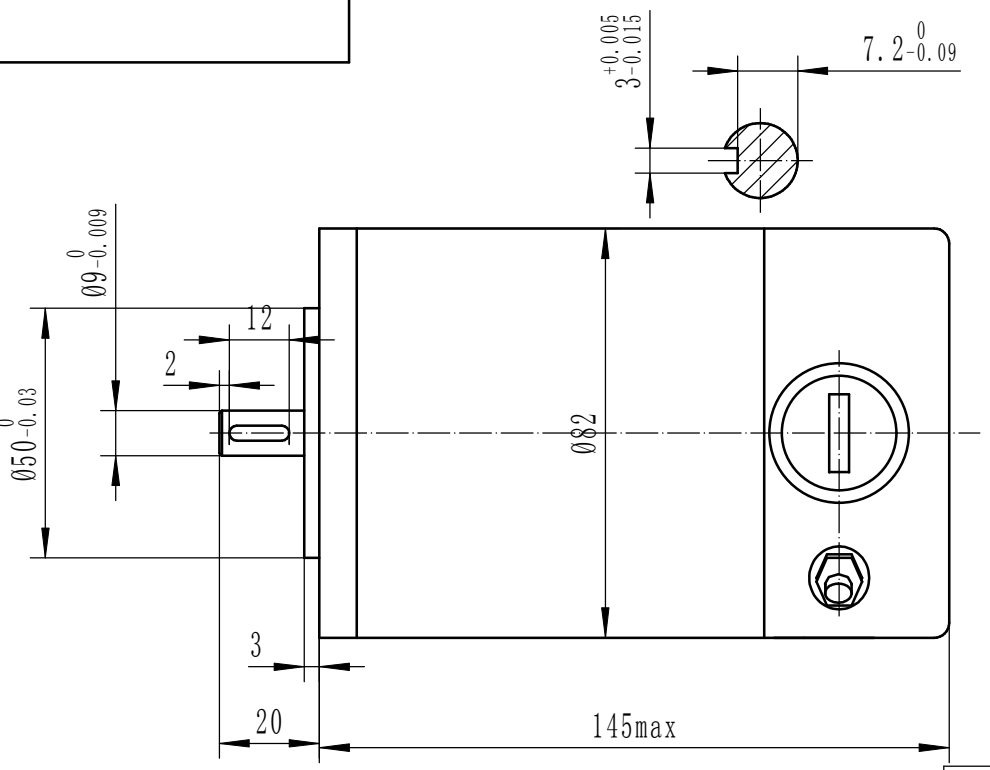

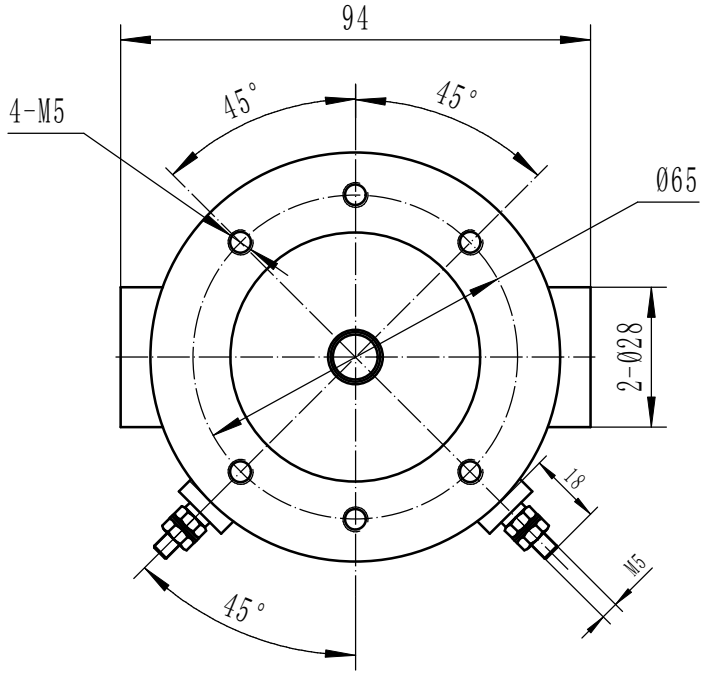

Model	Power(W)	Duty	Voltage(V)	Speed(rpm)
EC070.120	100	S2	12	3000
EC070.240	70/100	S1/S2	24	3000
EC100.120	100/140	S1/S2 25′	12	3000
EC100.240	100/140	S1/S2 25′	24	3000

80ZYT-56B14

PMDC MOTOR

1:1.5